SPECIFICATIONS

MCA Connector

EH Series
Vertical, T/H Type
1.27mm [.050"] Pitch
142 Pos.

Mechanical

Contact Normal Force: *75g min.*
Durability: *100 Cycles*
Contact Retention Force: *0.45kg min.*

Electrical

Current Rating: *1.0A, 30℃ Rise above Ambient*
Contact Resistance: *30mW max. initial, 40mW max. after Test*
Dielectric Withstand Voltage: *500V min. at Sea Level*
Pin to Pin Insulation Resistance: *1000MW min.*

Physical

Housing: *Thermoplastic, UL 94V-0 rated in White Color*
Contact: *Copper alloy*
Plating: See *"ORDERING INFORMATION"*
Storage Temperature Range: *-55℃ to +105℃*

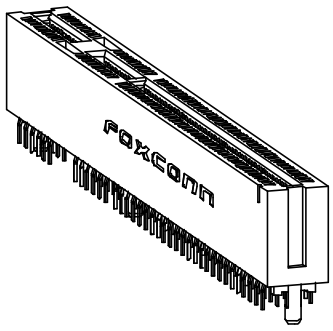

DRAWING

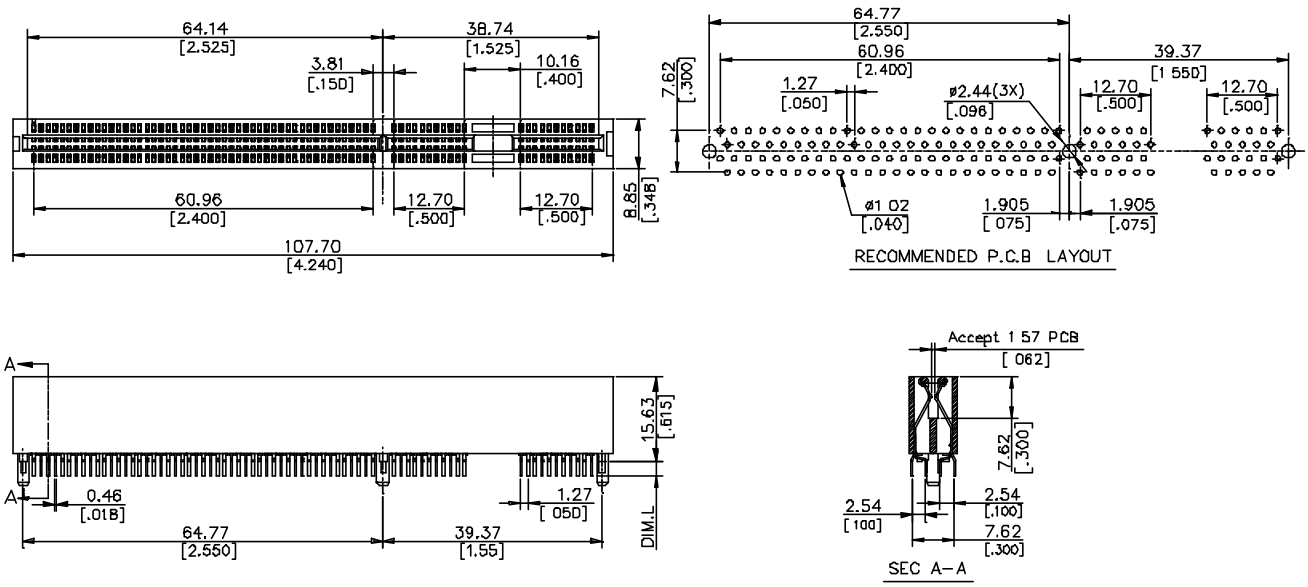

ORDERING INFORMATION

PRODUCT NO.: E H 0 71 * * - DCW - **

- Series prefix: Cardedge Conn.
- Tail Type: 0=Straight
- No. of pos.: 71=142 Pos.
- Tail Length: 0=3.18 [.125], 1=2.54 [.100]
- Gold Plating: 1=Gold Flash, 3=30u" Gold, 7=15u" Gold
- Extension Code
- Plating Type: DN=Tin/Lead, DF=Lead Free

P/N	DIM. L
EH0711*-DCW-**	2.54 [.100]
EH0710*-DCW-**	3.18 [.125]

All specification & dimensions are subject to change, please call your nearest Foxconn sales representative for update information.